Datasheet 57.152/153

Genesys

www.genesys-uk.com
sales@genesys-uk.com
0800-122-3319

Dataflex®

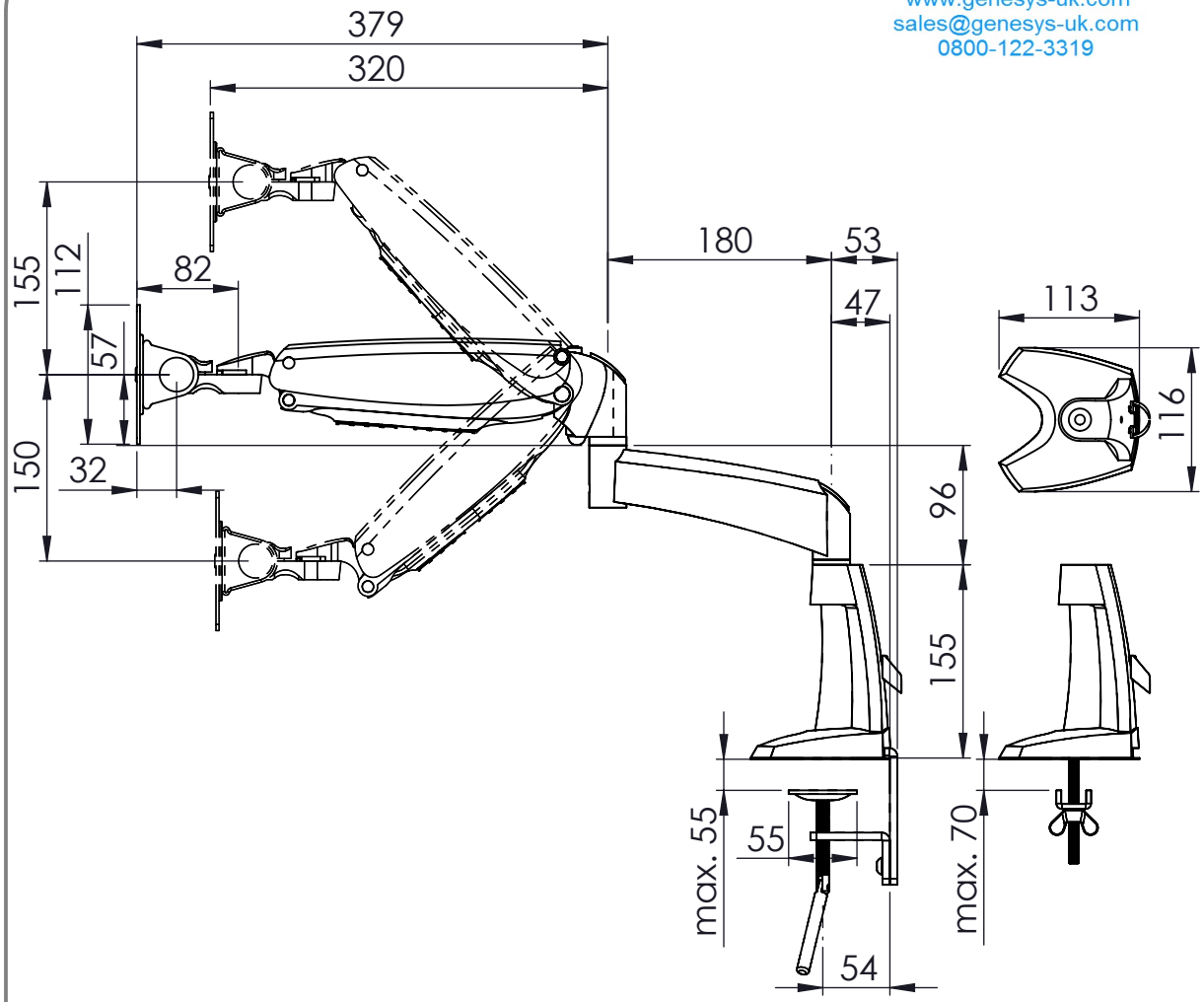

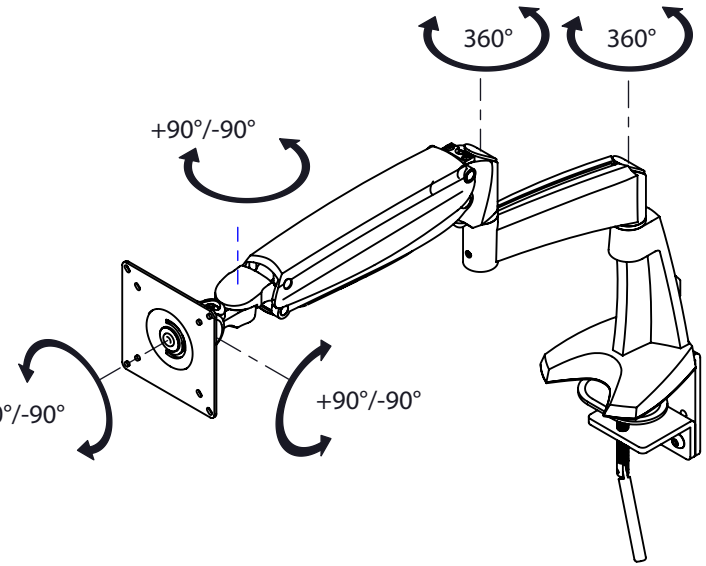

4,790	490x285x140	≤24"W	305	+90°/-90°	+90°/-90°	+90°/-90°	10	75/100

Created 31-5-2011 © Dataflex International BV - Krimpen a/d IJssel, The Netherlands

Dimensions in mm - Dimensions en mm - Abmessungen in mm - Afmetingen in mm